ASSEMBLY INSTRUCTION

A x34	B x8	C x2	D x1	E x1
				

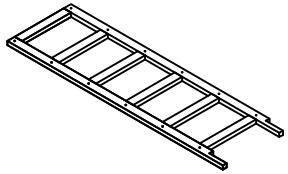		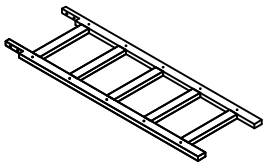	
⑴	2PCS	⑵	2PCS
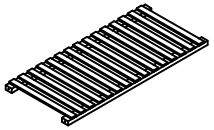			
⑶	6PCS	⑷	5PCS

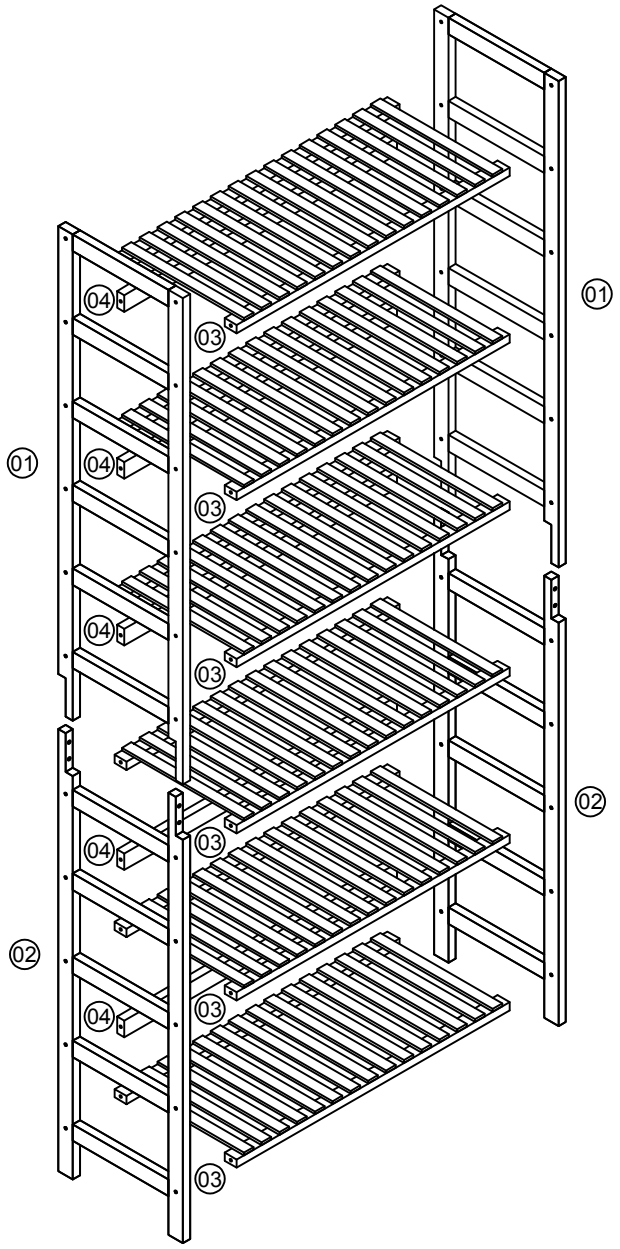

STEP 1

Ax34 | Bx8 | Ex1

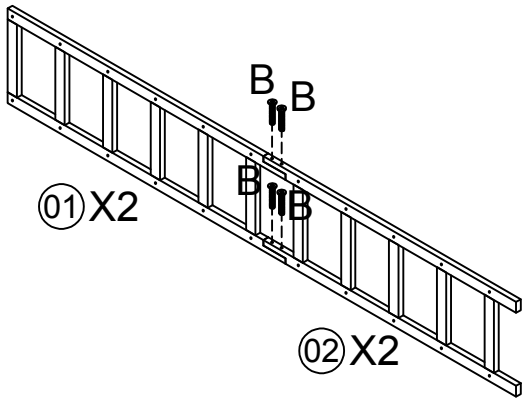

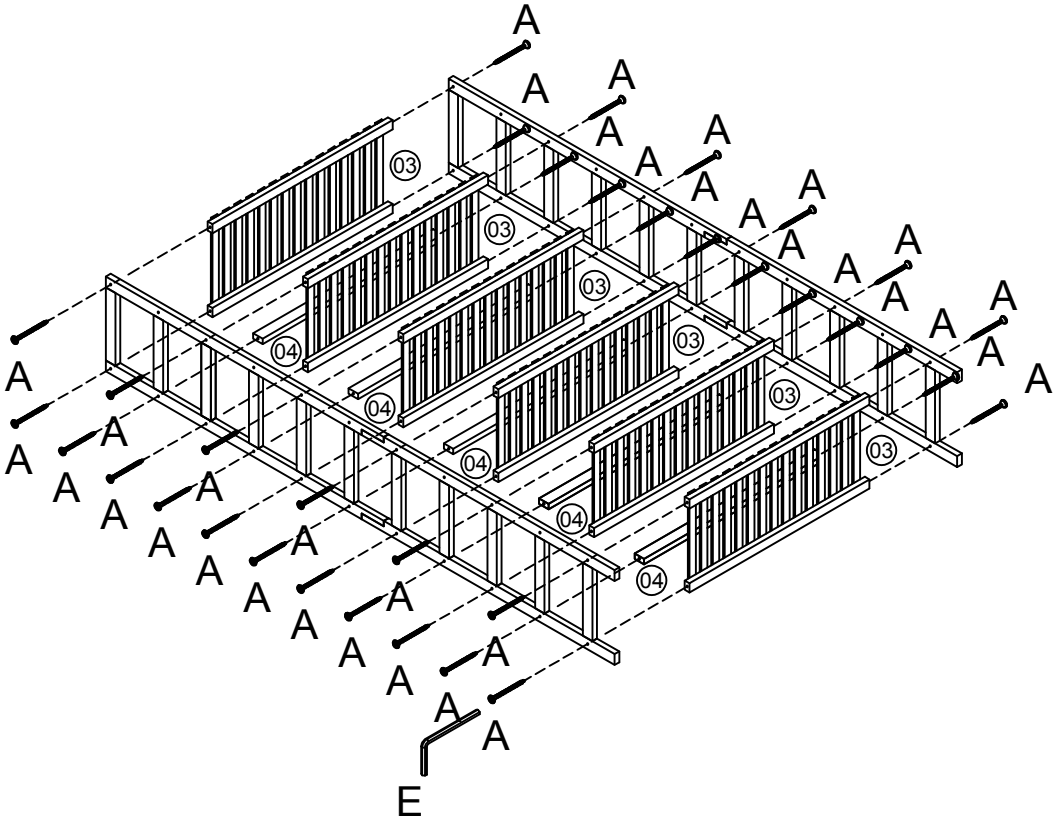

STEP 2

Cx1 | Dx1

