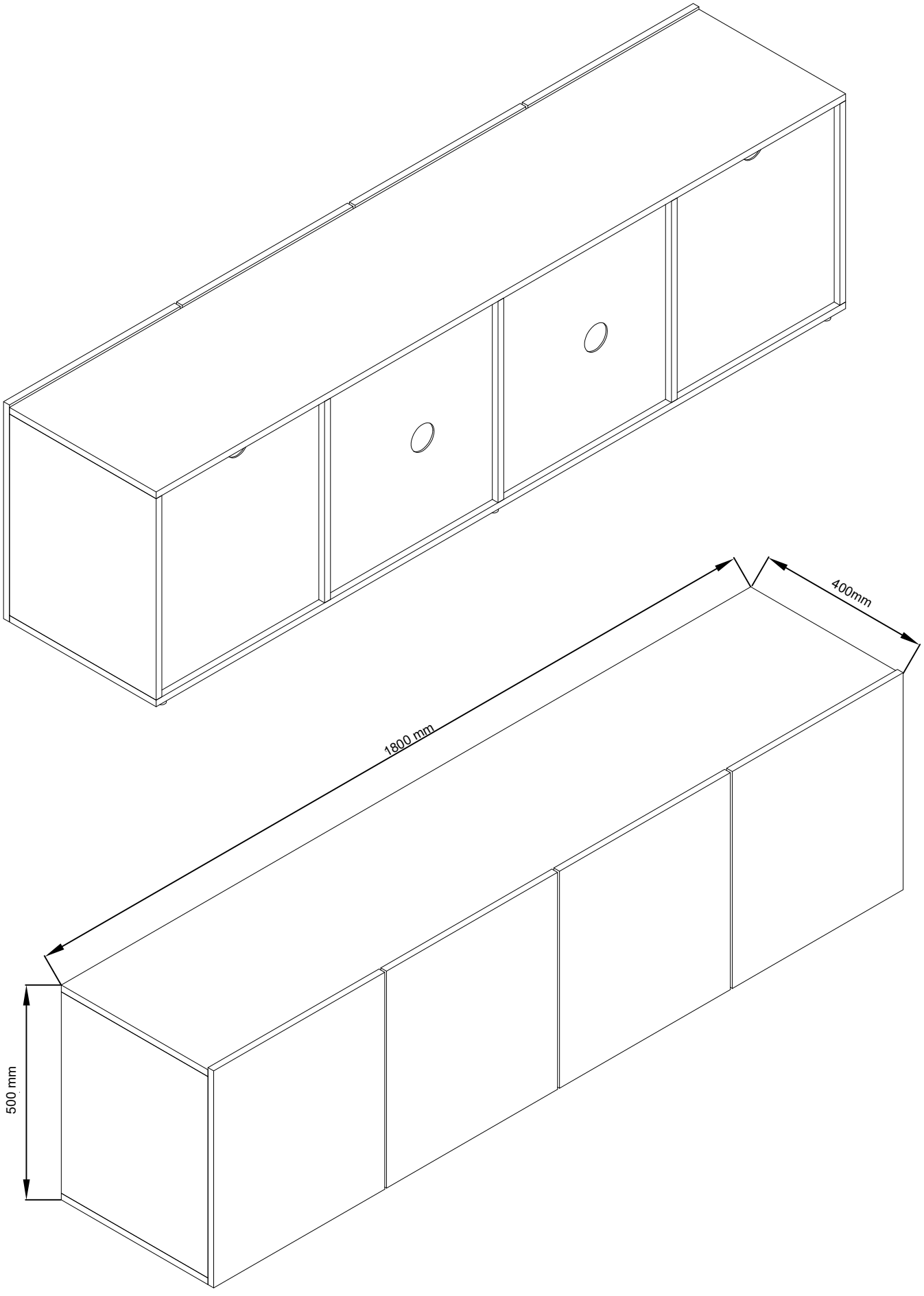
400mm
1800 mm
500 mm